TRUSS

TRAINING IN REDUCING UNCERTAINTY IN STRUCTURAL SAFETY

Marie Skłodowska-Curie Actions

The University of Nottingham

UNITED KINGDOM · CHINA · MALAYSIA

A fuzzy-based Bayesian Belief Network approach for railway bridge condition monitoring and fault detection

Matteo Vagnoli[a], Dr. Rasa Remenyte-Prescott [a], Prof. John Andrews [a]

[a] Resilience Engineering Research Group

Faculty of Engineering

University of Nottingham

University Park Nottingham, NG7 2RD

Background

The University of Nottingham
UNITED KINGDOM · CHINA · MALAYSIA

Railway infrastructure is exposed to various external loads such as earthquakes, wind and traffic during their lifetime

Lee, J.J., Lee, J.W., Yi, J.H., Yun, C.B., Jung, H.Y., "*Neural networks-based fault detection for bridges considering errors in baseline finite element models*", Journal of Sound and Vibration, 280 (3-5), pp. 555-578, 2005.

Condition monitoring and fault detection of railways are vital to guarantee its development, upgrading, and expansion

Hodge, V.J., O'Keefe, S., Weeks, M., Moulds, A., "*Wireless sensor networks for condition monitoring in the railway industry: A survey*", IEEE Intelligent Transportation Systems, 16 (3), art. no. 6963375, pp. 1088-1106, 2015.

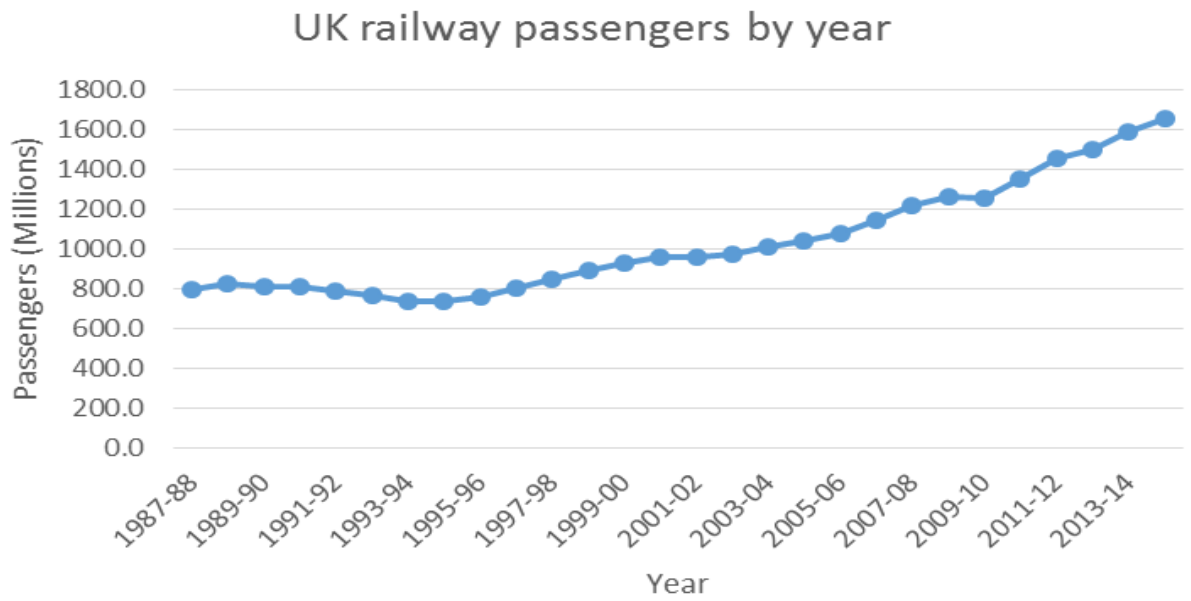

http://dataportal.orr.gov.uk/displayreport/report/html/02136399-b0c5-4d91-a85e-c01f8a48e07e

Network rail estimates to spend

£ 38 bn

over the period from 2014 to 2019 years in maintaining, renewing and improving the rail network

"*Delivering a better railway for a better Britain: our plans for 2014-2019*", Network rail, Network Rail Kings Place 90 York Way, London, N1 9AG, 2014

Railway bridges

Railway bridges are long-life assets that deteriorate due to traffic volume, environmental factors, inadequate inspection and poor maintenance management.

Deterioration processes may lead to a lower safety level and, potentially, to catastrophic events.

Rafiq, M.I., Chryssanthopoulos, M.K., Sathananthan, S., "*Bridge condition modelling and prediction using dynamic Bayesian belief networks*", Structure and Infrastructure Engineering, 11 (1), pp. 38-50, 2015.

More than 35% of the 300,000 railway bridges across Europe are over 100 years old.

European Commission, EU transport in figures, statistical pocketbook, 2012.

Bridge condition assessment and fault detection strategies are usually carried out by subjective visual inspection, at intervals of one to six years.

Yeung, W.T., Smith, J.W., "*Fault detection in bridges using neural networks for pattern recognition of vibration signatures*", Engineering Structures, 27 (5), pp. 685-698, 2005.

Bridges failures

1 year old!!!

17 February 2016, Gudbrandsdalslågen (Norway)

Bridges failures

2 August 2016, Leicestershire (UK)

Bridges failures

19 August 2016, Pitrufquén (Chile)

Bridges failures

7 September 2016, Dimbokro (Ivory Coast)

Bridges failures

28 October 2016, Milan (Italy)

Bridges failures

9 March 2017, Ancona (Italy)

Bridges failures

18 April 2017, Fossano, Cuneo (Italy)

Bridges failures

How can we avoid these situations?

Objective of the research

Real-time measurement system

- ✓ Remote structural health monitoring and fault detection
- ✓ Overcoming of manual bridge SHM limitations
- ✓ Assessment of the health state of the whole bridge by taking account of the health state of each different bridge element
- ✓ Maintenance can be scheduled by ensuring trains to operate without delays or interruptions to service

The bridge model

To simulate bridge behaviour in order to understand how it is influenced by component failure and degradation mechanisms.

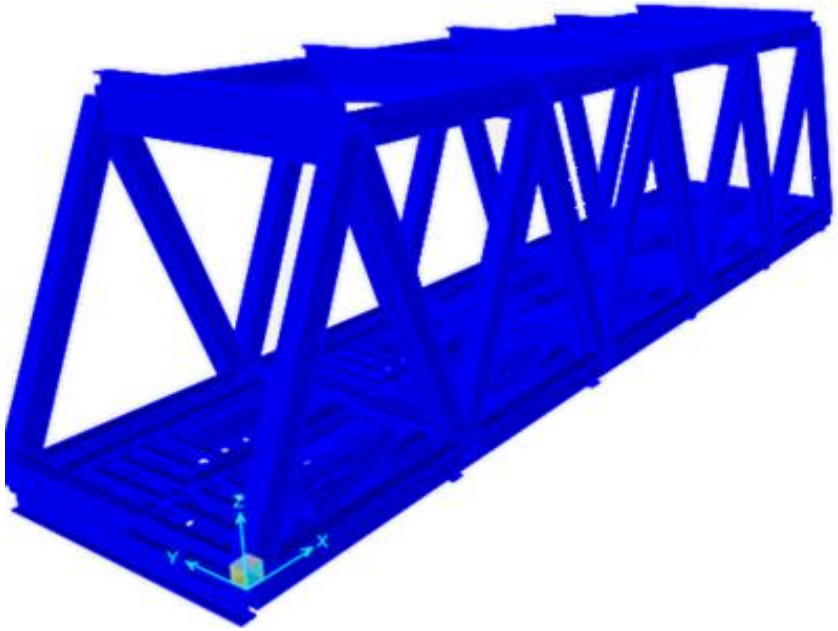

Degradation case

x micro-cracks of the joints are considered as degradation mechanism

- unavoidably created during the welding and assembling phase of the bridge.
- difficult to be spotted during a visual inspection.
- size increases due to cycle of loading and unloading, e.g. trains are continuously passing over the bridge.

The Bayesian Belief Network

To detect the states of elements using the evidence about bridge behavior in order to identify, and predict, elements fault assessing which component has to be firstly maintained.

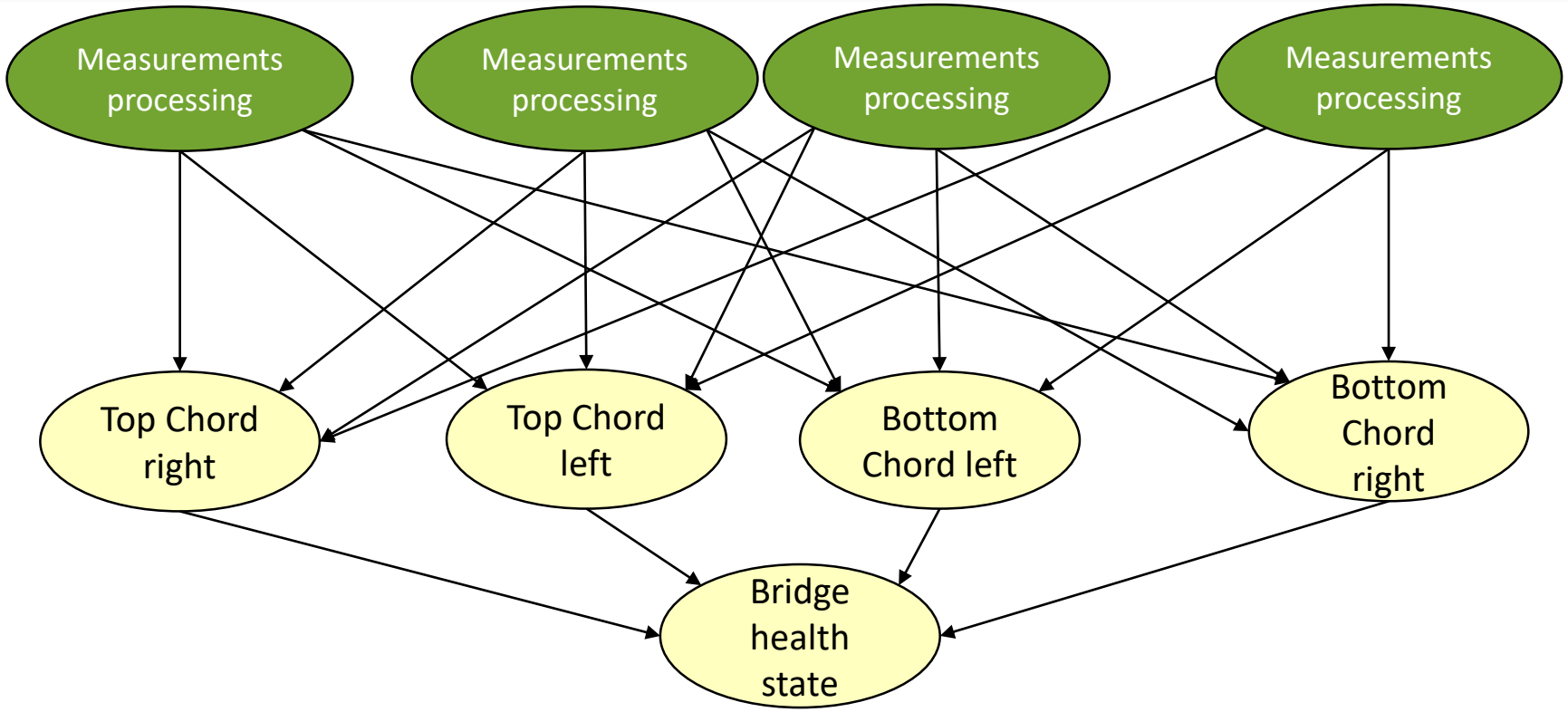

The Conditional Probability Tables (CPTs)

The University of Nottingham
UNITED KINGDOM · CHINA · MALAYSIA

To quantify the relationships between connected nodes, a group of bridge experts has been interviewed by using a 11 questions survey.

Linguistic probability scale	Description
Very Unlikely (VU)	It is highly unlikely that influences occur
Unlikely (U)	It is unlikely but possible that influences occur
Even Chance (EC)	The occurrence likelihood of possible influences is even chance
Likely (L)	It is likely that influences occur
Very Likely (VL)	It is highly likely that influences occur

The Conditional Probability Tables (CPTs)

The University of Nottingham
UNITED KINGDOM · CHINA · MALAYSIA

To quantify the relationships between connected nodes, a group of bridge experts has been interviewed by using a 11 questions survey.

Linguistic probability scale	Triangular fuzzy scale	Description
Very Unlikely (VU)	[1/2,1,3/2]	It is highly unlikely that influences occur
Unlikely (U)	[1,3/2,2]	It is unlikely but possible that influences occur
Even Chance (EC)	[3/2,2,5/2]	The occurrence likelihood of possible influences is even chance
Likely (L)	[2,5/2,3]	It is likely that influences occur
Very Likely (VL)	[5/2,3,7/2]	It is highly likely that influences occur

Triangular fuzzy membership function

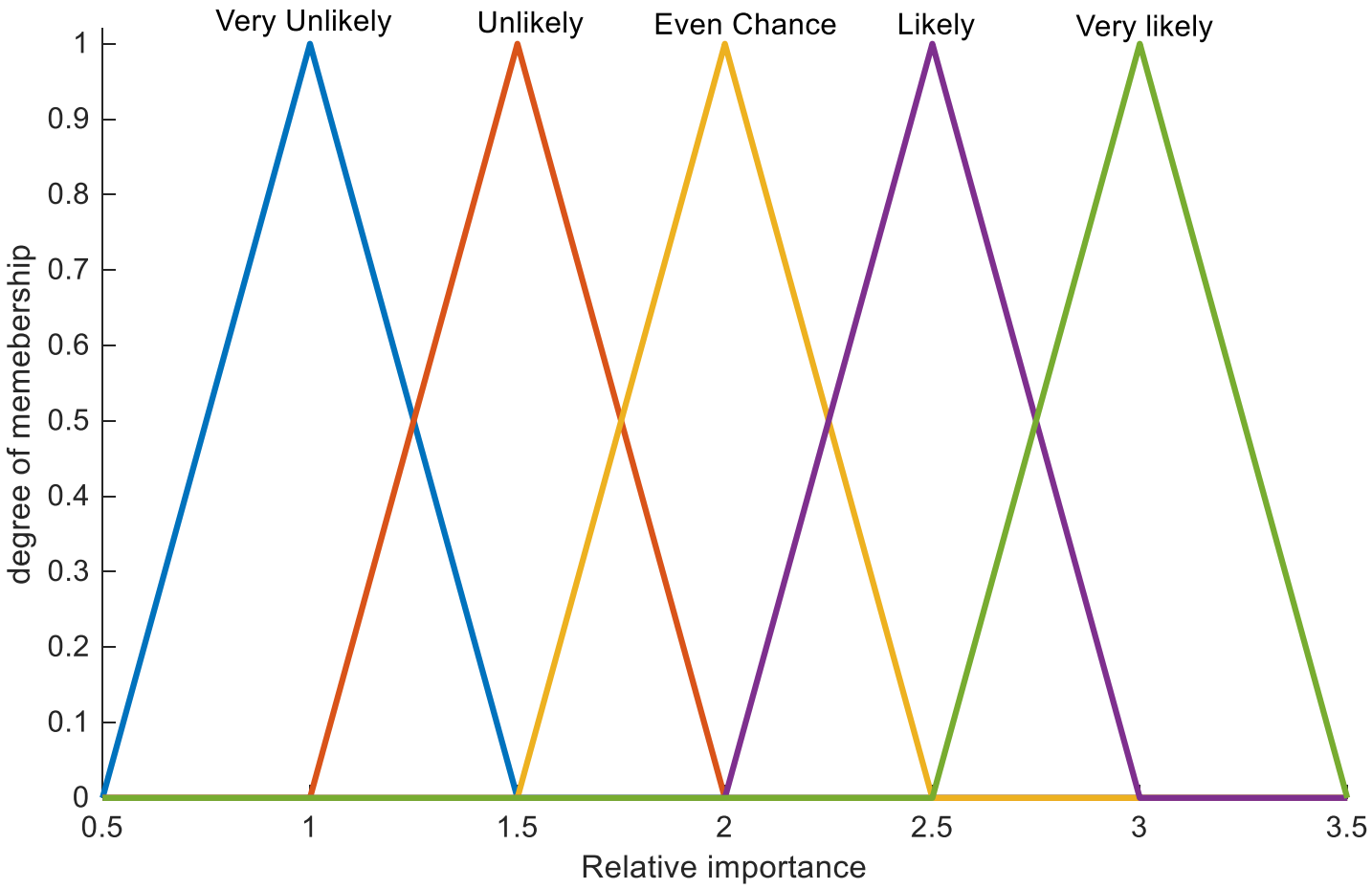

Fuzzy analytic hierarchy process (FAHP)

The University of Nottingham
UNITED KINGDOM · CHINA · MALAYSIA

Each Expert Judgement is weighted by considering the experience of the expert in order to compute an Average Judgment

↓

Fuzzy synthetic extent value of each pairwise comparison

↓

Fuzzy ranking synthetic extent by using total integral value with index of expert optimism

↓

Weight of the parent nodes on their child

Weighted mean based on expert's experience

The University of Nottingham
UNITED KINGDOM · CHINA · MALAYSIA

Each Expert Judgement is weighted by considering the experience of the expert in order to compute an Average Judgment

The different responses are merged together by weighing the years of experience (E_i) of the experts:

$$W_i = \frac{E_i^{\beta}}{\max_{i=1}^{N}(E_i^{\beta})}$$

Weighted mean based on expert's experience

The University of Nottingham
UNITED KINGDOM · CHINA · MALAYSIA

Each Expert Judgement is weighted by considering the experience of the expert in order to compute an Average Judgment

The different responses are merged together by weighing the years of experience (E_i) of the experts:

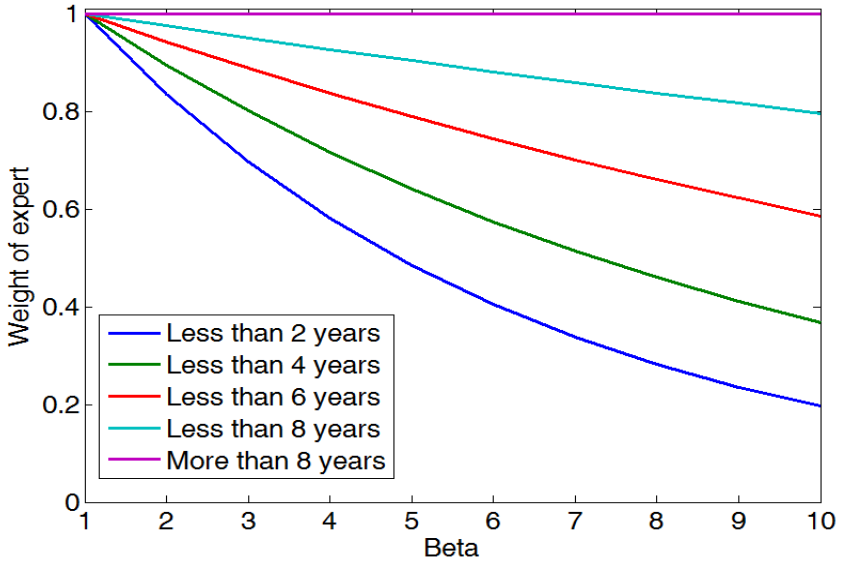

Increase of experience

Fuzzy synthetic extent

The University of Nottingham
UNITED KINGDOM · CHINA · MALAYSIA

Each Expert Judgement is weighted by considering the experience of the expert in order to compute an Average Judgment

Fuzzy synthetic extent value of each pairwise comparison

To assess the weights of the parent nodes on their child nodes in CPTs, by considering the ambiguity of human judgment

	TRC	BRC	TLC	BLC
TRC	[1 1 1]	U [1,3/2,2]	U [1,3/2,2]	VU [1/2,1,3/2]

- For each pairwise comparison $\widetilde{C_{ij}}$ we compute the fuzzy synthetic extent

$$\widetilde{S_i}=\sum_{j=1}^{n}\widetilde{C_{ij}}\cdot\left[\sum_{i=1}^{n}\sum_{j=1}^{n}\widetilde{C_{ij}}\right]^{-1}, i=1,2,\dots,n$$

Fuzzy synthetic ranking

The University of Nottingham
UNITED KINGDOM · CHINA · MALAYSIA

Each Expert Judgement is weighted by considering the experience of the expert in order to compute an Average Judgment

↓

Fuzzy synthetic extent value of each pairwise comparison

↓

Fuzzy ranking synthetic extent by using total integral value with index of expert optimism

To assess the weights of the parent nodes on their child nodes in CPTs, by considering the ambiguity of human judgment

- Fuzzy ranking synthetic extent by using total integral value with index of optimism (α)

$$\mathrm{I}_i = \frac{1}{2}(\alpha \mathrm{c}_i + \mathrm{b}_i + (1-\alpha)\mathrm{a}_i)$$

Importance weight vector

The University of Nottingham
UNITED KINGDOM · CHINA · MALAYSIA

Each Expert Judgement is weighted by considering the experience of the expert in order to compute an Average Judgment

↓

Fuzzy synthetic extent value of each pairwise comparison

↓

Fuzzy ranking synthetic extent by using total integral value with index of expert optimism

↓

Weight of the parent nodes on their child

To assess the weights of the parent nodes on their child nodes in CPTs, by considering the ambiguity of human judgment

- the importance weight vector of each bridge variable can be assessed

$$w_i = \frac{I_j}{\sum_j I_j}$$

Influence of the right Top chord

To assess the influence of the behaviour of the top chord on the right hand side on the health state of the other bridge elements.

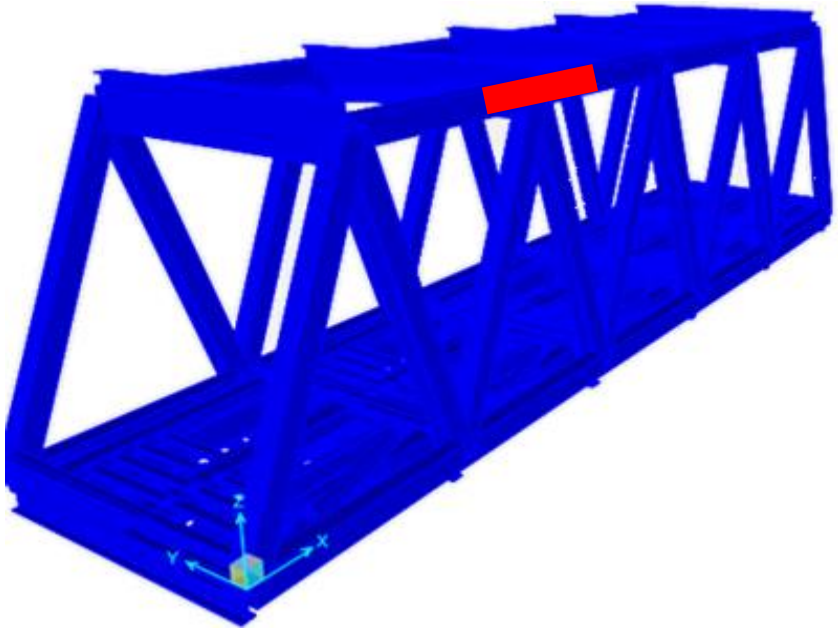

	Top Chord right	Bottom chord Right	Top Chord left	Bottom chord left
Importance Weight	0.30	0.26	0.222	0.218

Influence of the right Top chord

The University of Nottingham
UNITED KINGDOM · CHINA · MALAYSIA

To assess the influence of the behaviour of the top chord on the right hand side on the health state of the other bridge elements.

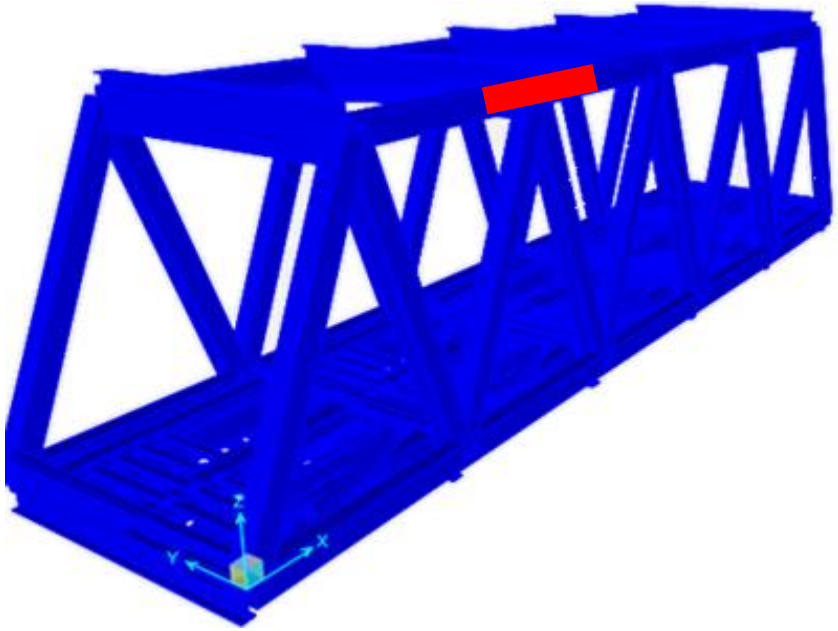

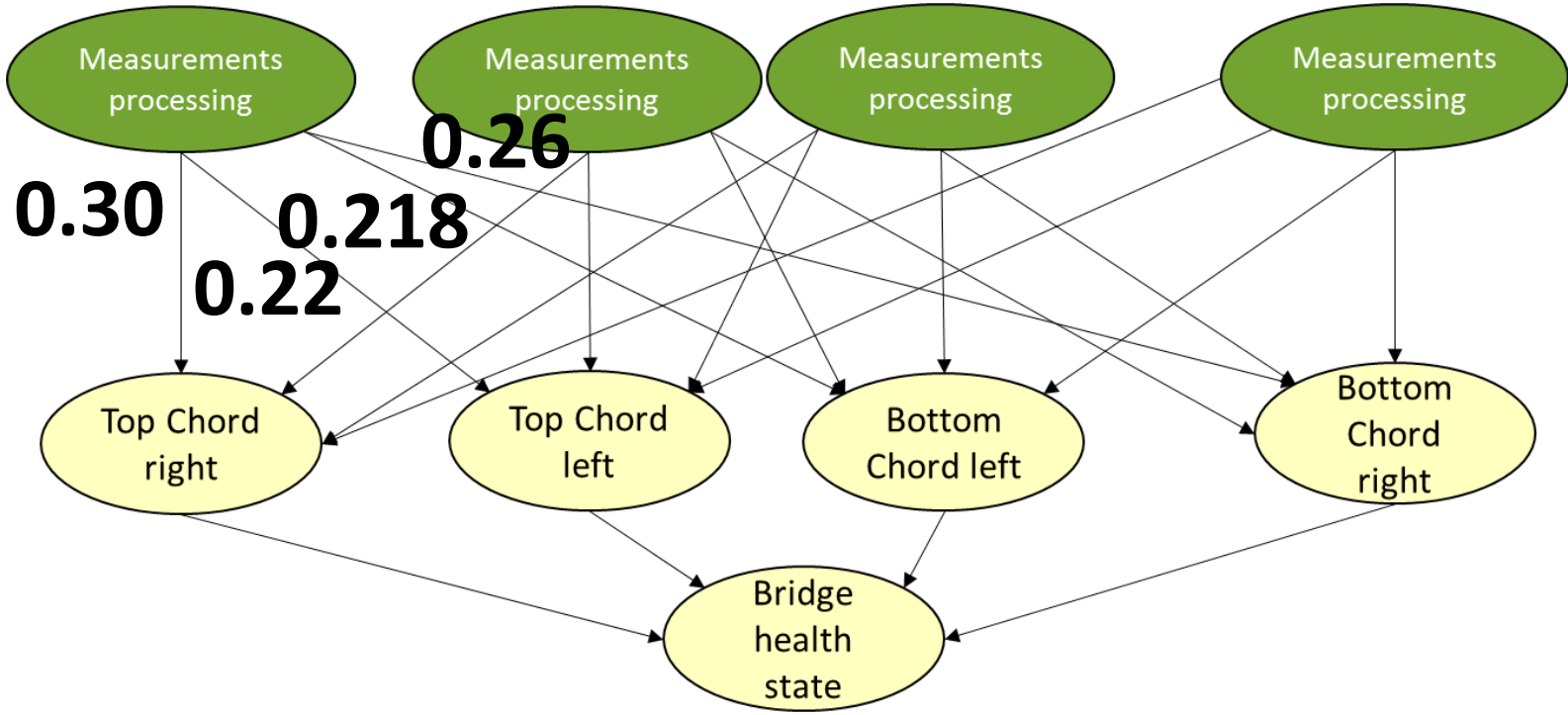

Consistency ratio

The University of Nottingham
UNITED KINGDOM · CHINA · MALAYSIA

Each Expert Judgement is weighted by considering the experience of the expert in order to compute an Average Judgment

↓

Fuzzy synthetic extent value of each pairwise comparison

↓

Fuzzy ranking synthetic extent by using total integral value with index of expert optimism

↓

Weight of the parent nodes on their child

To measures the consistency of the judgments in the comparison matrix

$$CI = \frac{\lambda_{max} - n}{n - 1}$$

Where λ_{max} is the principal eigenvalue of the defuzzified matrix

n	1	2	3	4
RI	0	0	0,58	0,90

Consistency ratio $= \frac{CI}{RI} < 0.1$

Consistency ratio =0.0154 ✓

The Conditional Probability Tables (CPTs)

The University of Nottingham
UNITED KINGDOM · CHINA · MALAYSIA

To quantify the relationships between connected nodes, 3 mutually exclusive health states of each element and the whole bridge have been defined.

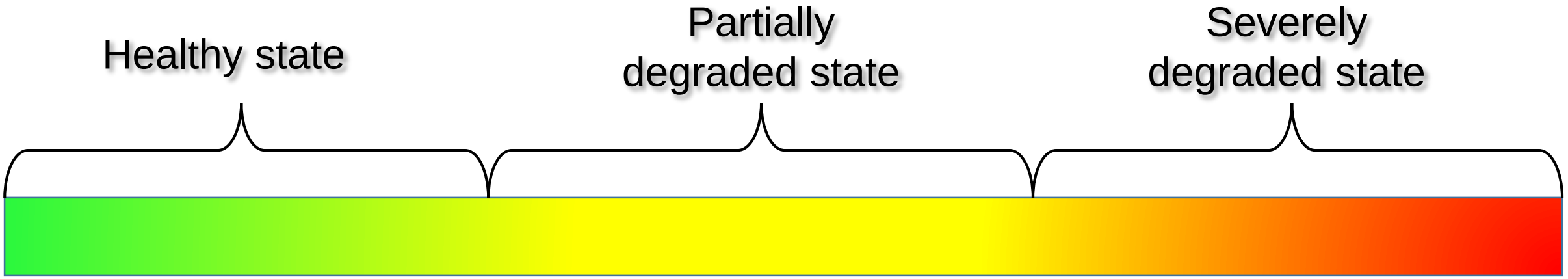

The elements of the bridge are in a good condition

The elements of the bridge potentially require maintenance

The elements of the bridge need to be maintained

Gradual degradation mechanism

The University of Nottingham
UNITED KINGDOM · CHINA · MALAYSIA

To simulate a gradual degradation mechanism of a small element of the top chord on the left hand side of the bridge, and to assess the influence of this degradation to all the bridge.

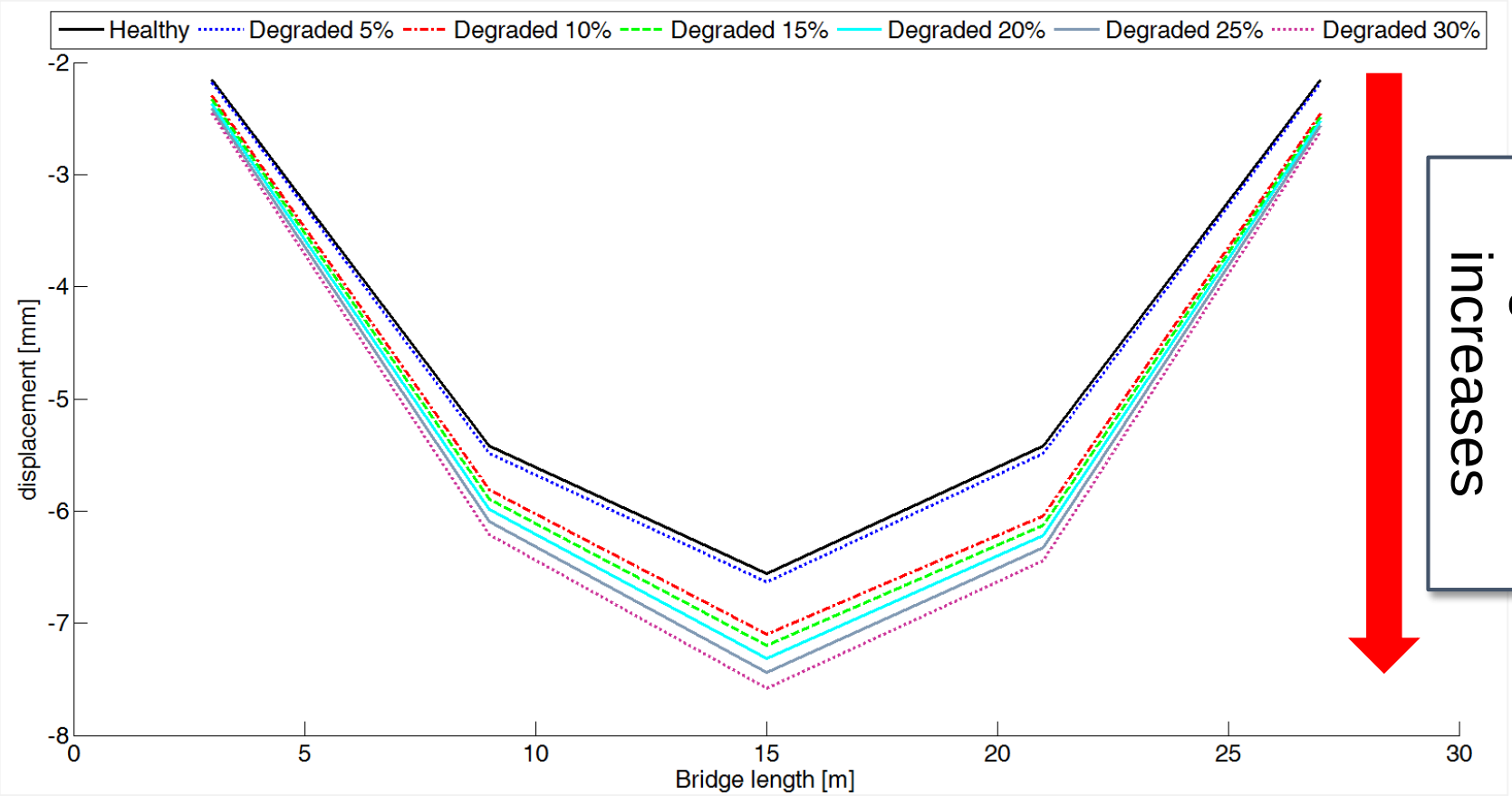

Introducing evidence into the BBN

The University of Nottingham
UNITED KINGDOM · CHINA · MALAYSIA

Evidence about health state of the bridge

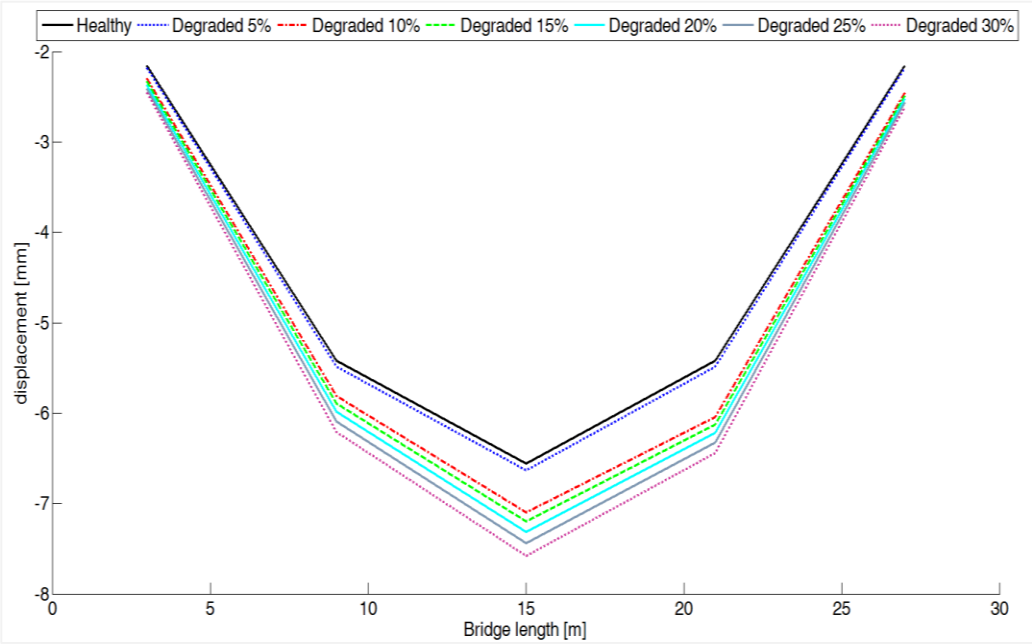

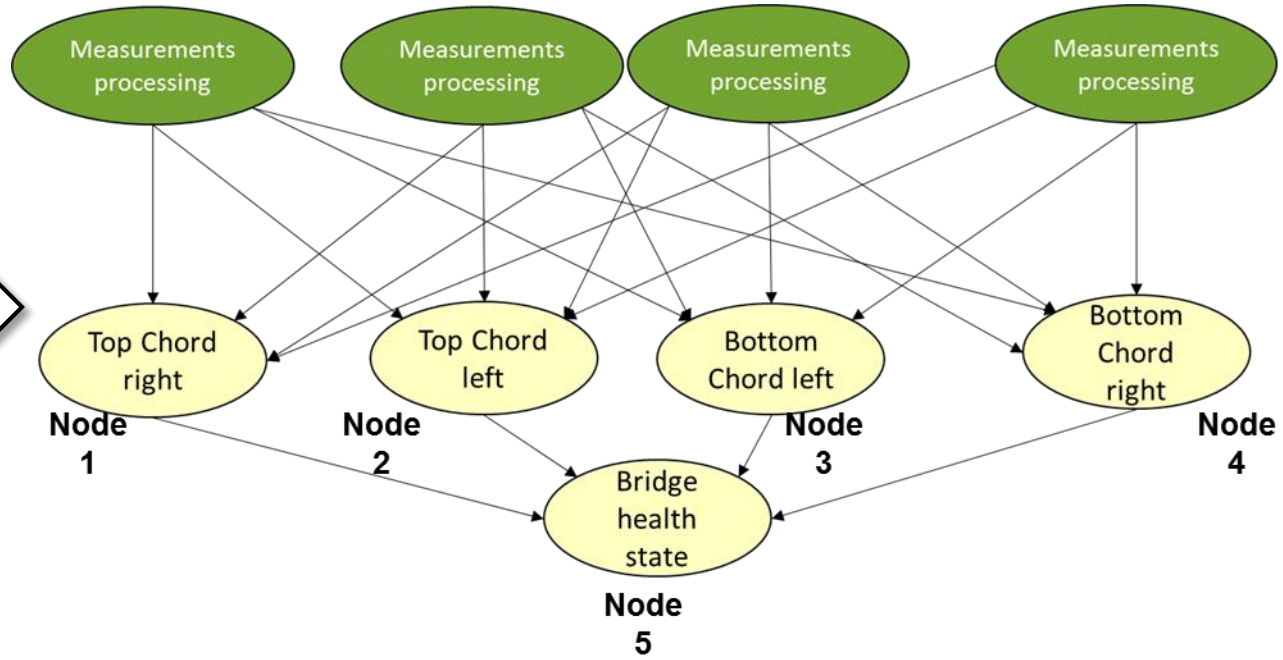

Posterior probability distribution

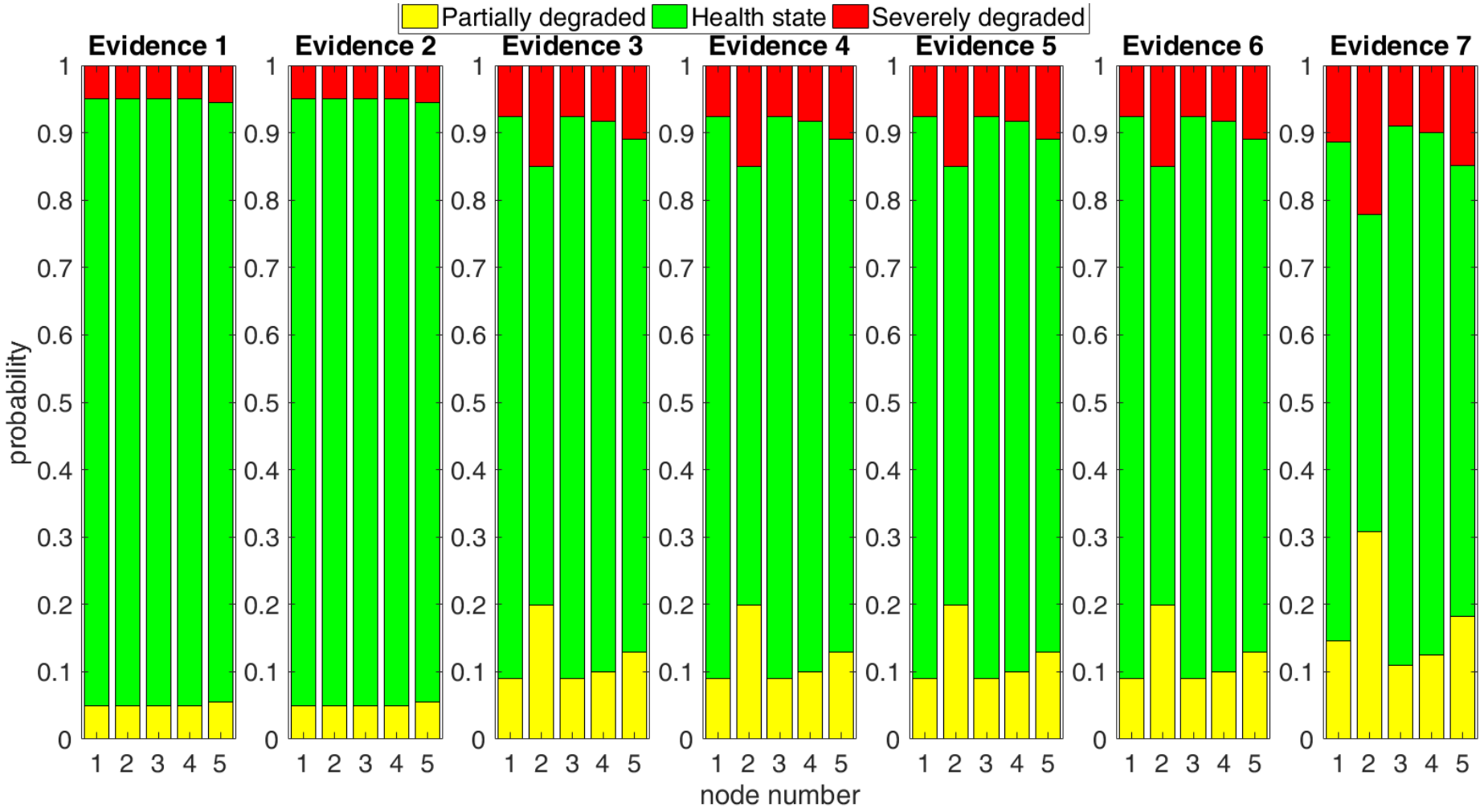

Future challenges

To automatically detect and diagnose causes of unexpected bridge behaviour, in order to provide rapid and reliable information to bridge managers

- The structure of the BBN should consider all possible dependencies among different elements of the bridge
- More robust definition of the CPTs
  - Analysis of the correlation between the degradation mechanisms and the bridge behaviour
- Real bridge analysis by using data provided by sensors installed on a real bridge in Japan (in collaboration with the University of Kyoto)

Conclusion

- There is a need for real-time remote structural health monitoring and fault detection by overcoming the limitations of traditional manual bridge SHM.
- The influence of each single bridge element should be considered on the assessment of the bridge health state.

We have proposed a BBN-based SHM method to monitor the evolution of a bridge health state

Pros:

- Each bridge element influences the health state of the whole bridge
- The health state of the bridge and its elements is updated each time when new evidence of the bridge behaviour is available

Cons:

- The method relies on the data provided by a Finite Element model of a steel truss bridge
- Assumptions have been made in the development of the Finite Element model and the BBN

Thank you for your attention

Matteo.Vagnoli@nottingham.ac.uk

John.Andrews@nottingham.ac.uk

R.Remenyte-Prescott@nottingham.ac.uk

This project has received funding from the European Union's Horizon 2020 research and innovation programme under the Marie Skłodowska-Curie grant agreement No. 642453.